MTS INSTALLATION AND OPERATION MANUAL

60–3000 Amp
2, 3 & 4 Pole

WARNING Before Installation READ THIS MANUAL carefully to learn how to properly install, operate and maintain this unit. Personal injury and/or equipment damage will result by failing to pay attention to the safety information and instructions in this manual.

RETAIN THIS MANUAL WITH THE UNIT. This technical manual contains IMPORTANT SAFETY DATA and should be kept with the Transfer Switch at all times.

7/16/20
KDoc_002 Rev A

Contents

1 INTRODUCTION **2**

2 RECEIVING, HANDLING, and STORAGE **2**
2.1 RECEIVING 2
2.2 HANDLING 2
2.3 STORAGE 3

3 INSTALLATION **3**
3.1 MOUNTING LOCATION 3
3.2 CABLE-ENTRY 3
3.3 CONDUCTOR ROUTING 3
3.4 POWER CONNECTIONS 4

4 OPERATION **4**

5 MAINTENANCE **5**

6 TROUBLESHOOTING **5**

7 OPTIONAL FEATURES **6**
7.1 SHORT CIRCUIT PROTECTION 6
7.2 SERVICE ENTRANCE RATING 6
7.3 CAM-LOK RECEPTACLES 6

8 WARRANTY **6**

9 WIRING DIAGRAMS **7**
9.1 2 POLE DIAGRAM 7
9.2 3 POLE DIAGRAM 8
9.3 4 POLE DIAGRAM 9

1 INTRODUCTION

Manual Transfer Switches are used to manually transfer power from one source to another. The most common application is transferring power from the utility to a generator during a utility failure. Kratos Industries' Manual Transfer Switch is an enclosed, three-position switch with an external handle for switching. Figure 1 below depicts a basic application of the Manual Transfer Switch with two sources and a center "OFF" position. When failure of one source occurs, transfer to the other source by using the external handle. The switch contains a center off position to prevent simultaneous connection of both sources.

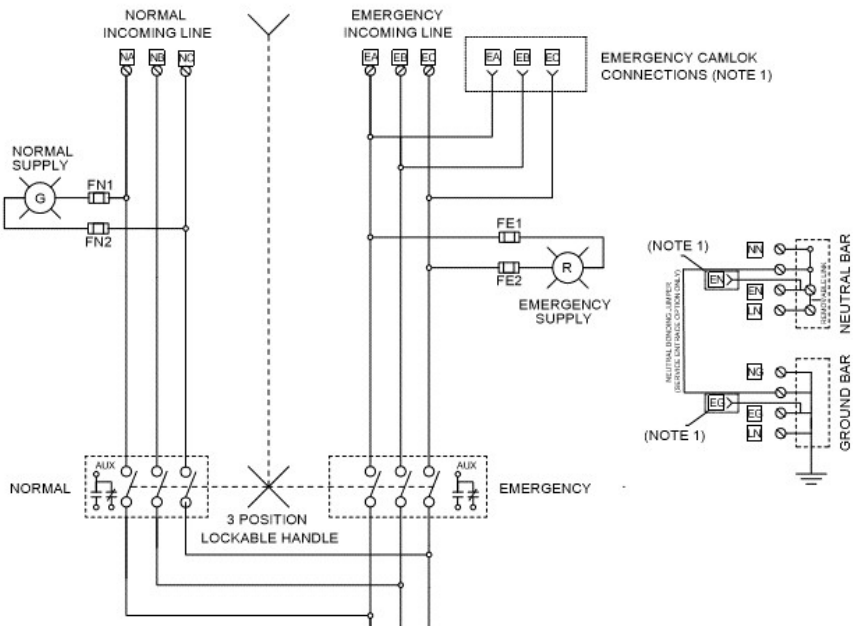

Figure 1: Typical Transfer Scheme

2 RECEIVING, HANDLING, and STORAGE

2.1 RECEIVING

Upon receipt of the Manual Transfer Switch, unpack the unit and check for any damage that may have occurred during shipment. If you see ANY damage OR potential damage STOP and contact the factory before going any further. While our MTS are very rugged, shipping damage may cause the unit to malfunction or fail resulting in a safety risk.

2.2 HANDLING

The following guidelines are provided to help avoid personal injury and equipment damage during handling.

1. Follow the manufacturer's handling instructions for the specific equipment.
2. Handle the Manual Transfer Switch with care, to avoid damage to components and to the enclosure or its finish. Rough handling can result in scratches to the paint which will promote premature rust/corrosion.
3. The MTS has an offset center of gravity. Make sure to use best practices for lifting and rigging the enclosure off the pallet and into place. Soft straps should be used and care taken when strapping across any sharp edge.

2.3 STORAGE

Kratos Industries standard packaging is not intended for long-term storage, particularly in coastal areas. If a long-term storage packaging is required, please contact the factory and we provide a cost for long-term storage packaging.

If the Manual Transfer Switch is to be stored for any length of time prior to installation, restore the packaging for protection during that period. Where conditions permit, leave the packing intact until the Manual Transfer Switch is at its final installation position. When packing is removed, cover the top and openings of the equipment during the construction period to protect them against dust and debris.

3 INSTALLATION

NOTE: It is the customer's responsibility to ensure that all local, regional, and national codes and standards are correctly followed. Installation, cable termination and startup should be performed by a licensed electrician

Your product's Nameplate – located on the door – will state the voltage, phase, frequency, appropriate wiring diagram, environmental rating, and short circuit rating of the unit. Failure to comply with any of these designations may result in product failure and void your warranty.

3.1 MOUNTING LOCATION

It is the responsibility of the customer to determine the final mounting location of the Manual Transfer Switch before installation.

Refer to the included dimensional drawing for mounting dimensions. Refer to your UL Information label to ensure correct application. All indoor Manual Transfer Switches should be installed near the switchgear or service entrance. All outdoor Manual Transfer Switches should be located as close as possible to the engine generator or to the alternate source.

3.2 CABLE-ENTRY

Manual Transfer Switches are shipped from the factory with no holes for cable entry. Any enclosure penetrations for cable entry must be provided in the field. Conduits should be installed to prevent moisture or water from entering and accumulating within the enclosure. All conduits (including stubs) should be bonded to the Manual Transfer Switch. All conduits should be chosen to maintain the appropriate NEMA rating and located in areas recommended by the manufacturer to avoid cable interference with structural members and live components. See products nameplate for appropriate conduit NEMA rating.

3.3 CONDUCTOR ROUTING

Provisions should be made to locate conductors in the Manual Transfer Switch to avoid physical damage and to avoid overheating. The conductors should be secured to withstand available short-circuit currents. Follow the manufacturer's instructions for lacing or bracing cables. The largest practical bending radius should be maintained to avoid insulation damage and loose terminals. Please consult and follow appropriate NEMA Bending Radius standards.

3.4 POWER CONNECTIONS

Refer to the drawings in the drawing packet provided for customer connections prior to installing. It is the responsibility of the customer to ensure the field conductors are sized appropriately. Ensure the Manual Transfer Switch is in the “Off” position before making the connections. Connect the LOAD, NORMAL SOURCE and EMERGENCY SOURCE power cables in the same phase sequence. Refer to the torque label on the door interior for torque requirements.

Care should be exercised in stripping the insulation from the conductors to prevent the conductor from “nick” or “ring”. For aluminum, clean all oxide from the stripped portion and immediately apply inhibiting compound. Installation of cables should be done at temperatures above freezing to prevent cable insulation from cracking or splitting due to cold, unless the cable is suitable for installation at temperatures below freezing.

4 OPERATION

Refer to the schematic and wiring diagrams provided with the Manual Transfer Switch. These drawings are provided in a packet and 2, 3 and 4 pole diagrams can be found in this manual.

After installation is complete and either source for the Manual Transfer Switch is energized, a source availability pilot light on the door exterior will energize, indicating the source is live. Transfer to either source is done by turning the exterior handle in the source direction indicated on the exterior door. Direct transfer from one source to the other is not possible due to the center “OFF” position. The operator must turn the handle from the first source to the center “OFF” position and then from the center “OFF” position to the second source.

The enclosure door is interlocked with the Manual Transfer Switch, preventing opening of the enclosure door when the switch is in either source position. A white tab on the switch handle is present for adding a padlock to lock the switch in a position. As shown in figure 2 below, lifting the tab exposes the holes for inserting the padlock shackle and prevents the handle from turning to a different position.

Figure 2: Switch Handle

Two Form-C auxiliary contacts are included for both source positions. Refer to the schematic supplied with

the Manual Transfer Switch. The contacts are rated for pilot duty: 5 Amps @ 125 or 250 VAC.

5 MAINTENANCE

DO NOT TOUCH THE MANUAL TRANSFER SWITCH UNIT UNTIL ALL POWER IS DISCONNECTED. SHOCKS, BURNS OR DEATH MAY RESULT FROM HIGH VOLTAGE

Preventative Maintenance
The following checks should be performed as a part of routine maintenance.

- ✓ After installation a transfer test of the Manual Transfer Switch should be performed WEEKLY
  - Verify the Manual Transfer Switch transfers to the emergency power source.
  - Verify the Manual Transfer Switch re-transfers to the NORMAL position.
- ✓ Inspect unit for any signs of damage, weathering, or water intrusion
- ✓ Keep clean of dirt and water – use a VACUUM or CLOTH – as with all electrical equipment, do not use compressed air as it may lodge contaminates into electrical components.
- ✓ Check all wiring connections that may have become loose or corroded.
- ✓ Visually inspect the contacts for surface deposits and pitting ANNUALLY.

6 TROUBLESHOOTING

DO NOT TOUCH THE MANUAL TRANSFER SWITCH UNIT UNTIL ALL POWER IS DISCONNECTED. SHOCKS, BURNS OR DEATH MAY RESULT FROM HIGH VOLTAGE

Before troubleshooting, perform the following checks:

- ✓ Visual Inspection for physical damage.
- ✓ Ensure the source intended for use is operational and available.
- ✓ Ensure the switch handle is in the intended position.
- ✓ Ensure all wiring connections are secure.
- ✓ If the unit is fusible, ensure the fuses are not blown.
- ✓ If the unit contains a circuit breaker, ensure the breaker has not tripped.

As-built schematics and panel outlines are provided as a part of the drawing packet supplied with each Manual Transfer Switch and in this manual. Consult factory if a cause for the problem cannot be found.

7 OPTIONAL FEATURES

7.1 SHORT CIRCUIT PROTECTION

Manual Transfer Switches can be provided with short circuit protection, including fuses or a circuit breaker. Fusible Manual Transfer Switches do not come with fuses unless purchased separately.

7.2 SERVICE ENTRANCE RATING

Manual Transfer Switches can be rated "Suitable for use as Service Equipment." Service Entrance rated switches will have short circuit protection, main bonding jumper, and a Service Disconnect Label. When the Manual Transfer Switch is to be used as Service Equipment, the label, "SERVICE DISCONNECT" should be placed near the disconnect handle.

7.3 CAM-LOK RECEPTACLES

Manual Transfer Switches can be provided with Cam-Lock receptacles and flip covers installed for a portable generator. The receptacles can be male or female and will be color coded for the nominal voltage. It is the responsibility of the customer to ensure that the generator cables are fitted with the appropriate cord-ends. Before connecting, ensure the portable generator in not energized and the Manual Transfer Switch is not in the Emergency position.

8 WARRANTY

Kratos Industries warrants equipment manufactured by it and sold through authorized sales channels to be free from defects in materials and workmanship for the lesser of eighteen (18) months from date of shipment or twelve (12) months from date of commission. If within such period any such equipment shall be proved to Kratos Industries satisfaction to be non-conforming, such equipment shall be repaired or replaced at Kratos Industries option.

This warranty shall not apply to:

(a) equipment not manufactured by Kratos Industries.

(b) equipment that has been repaired or altered by other than Kratos Industries so as, in its judgment, to adversely affect the same.

(c) equipment that has been subjected to negligence, accident, or damage by circumstances beyond Kratos Industries control.

(d) equipment which has been damaged through improper operation, maintenance, or storage.

(e) equipment which has been subjected to other than normal use or service.

With respect to equipment not manufactured by Kratos Industries, the warranty obligations of Kratos Industries shall in all respects conform and be limited to the warranty actually extended to Kratos Industries by its supplier. Non-conforming products must be returned at the purchaser's expense for evaluation unless this requirement is waived in writing. Replacement products may be new or reconditioned. The foregoing warranties cover replacement product only and do not cover reimbursement for labor, transportation, removal, installation, temporary power, or any other expenses that may be incurred in connection with repair or replacement.

9 WIRING DIAGRAMS

9.1 2 POLE DIAGRAM

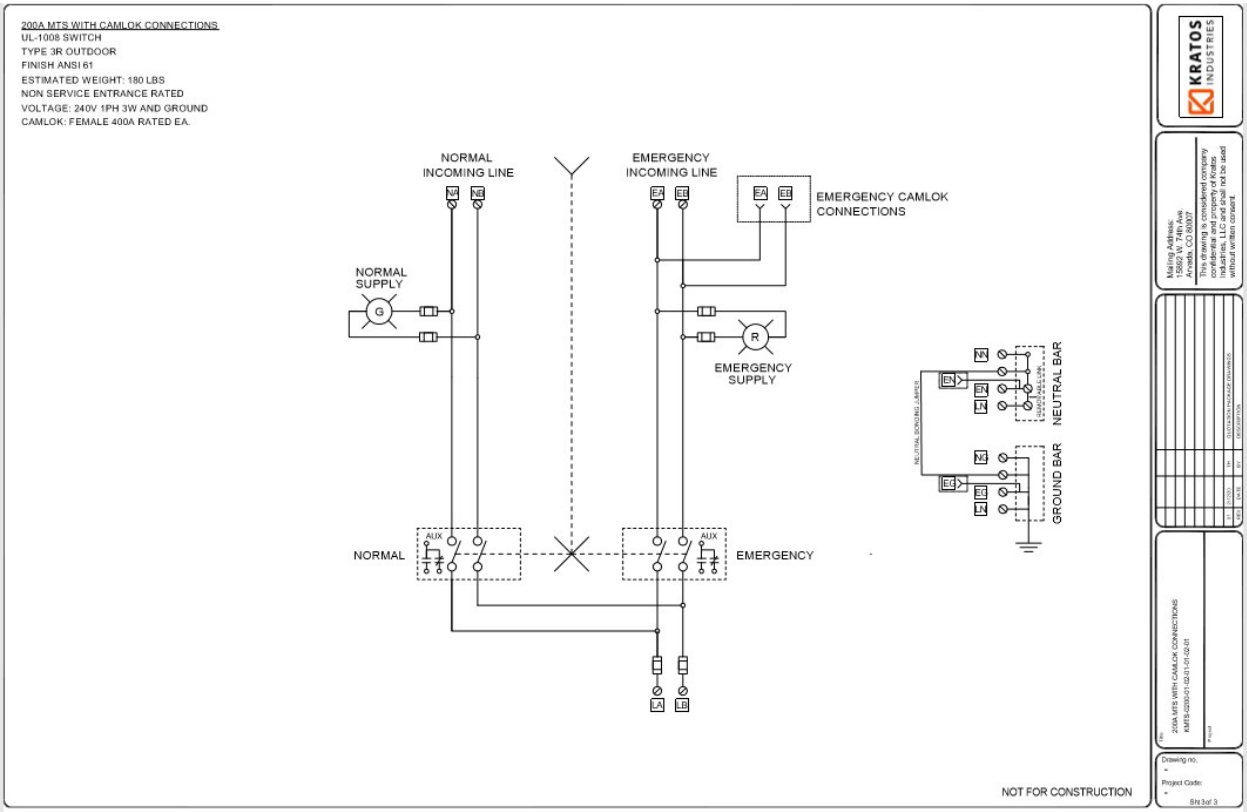

9.2 3 POLE DIAGRAM

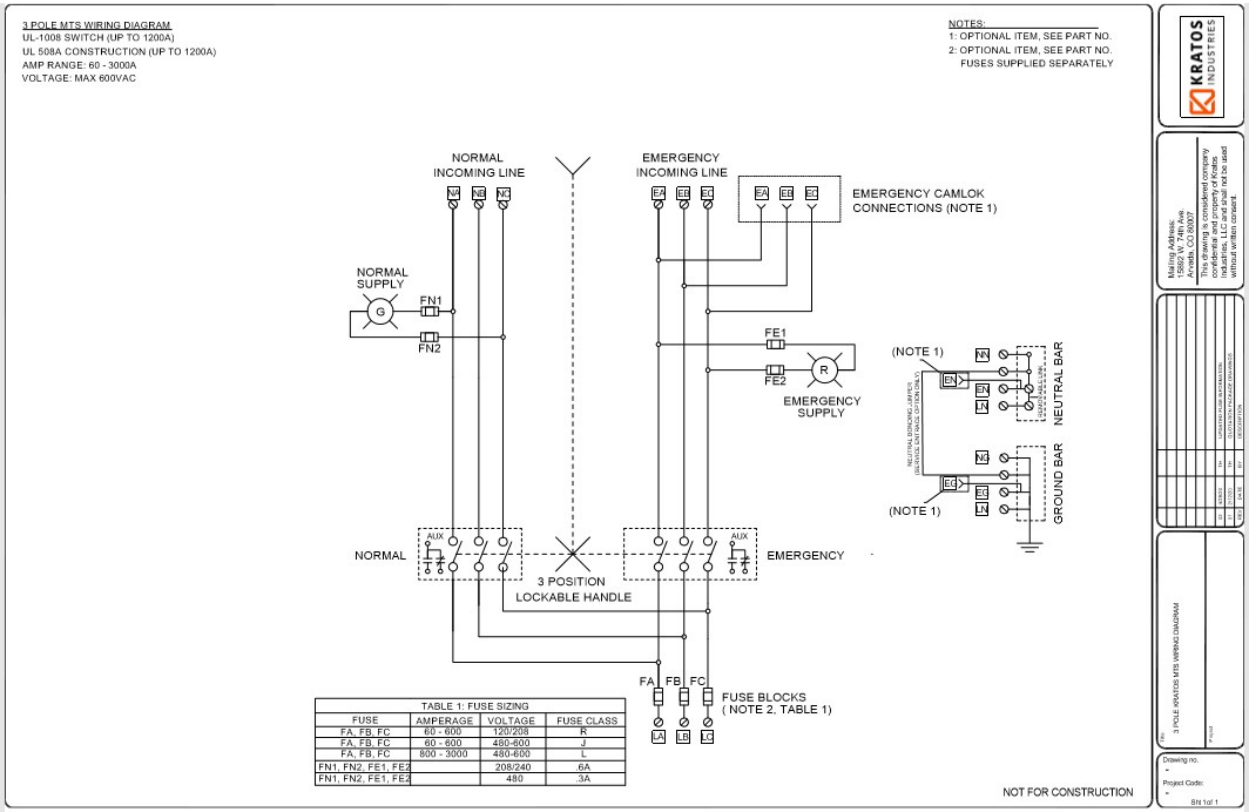
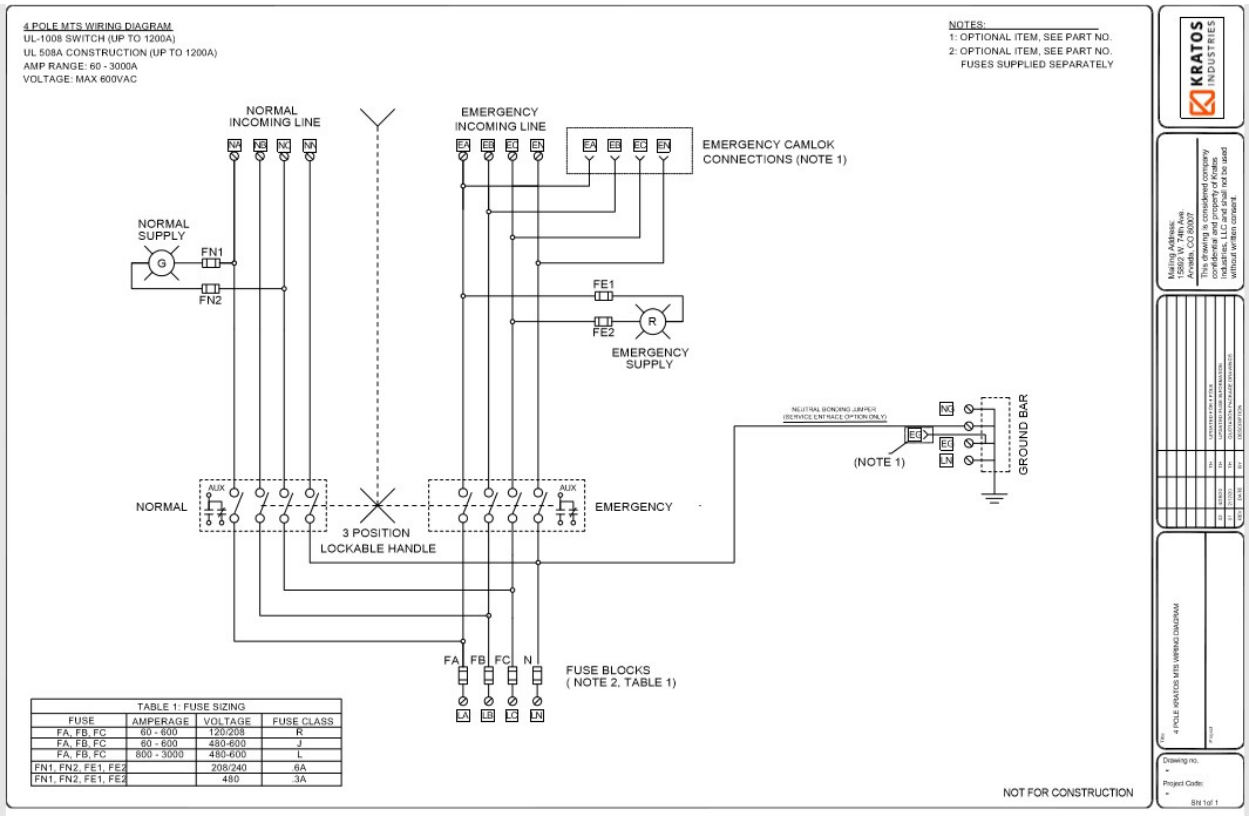
9.3 4 POLE DIAGRAM